**DENSEI · delvo®**

ELECTRIC SCREW-DRIVER

DLV7319-CME
DLV7329-CME
DLV7339-CME

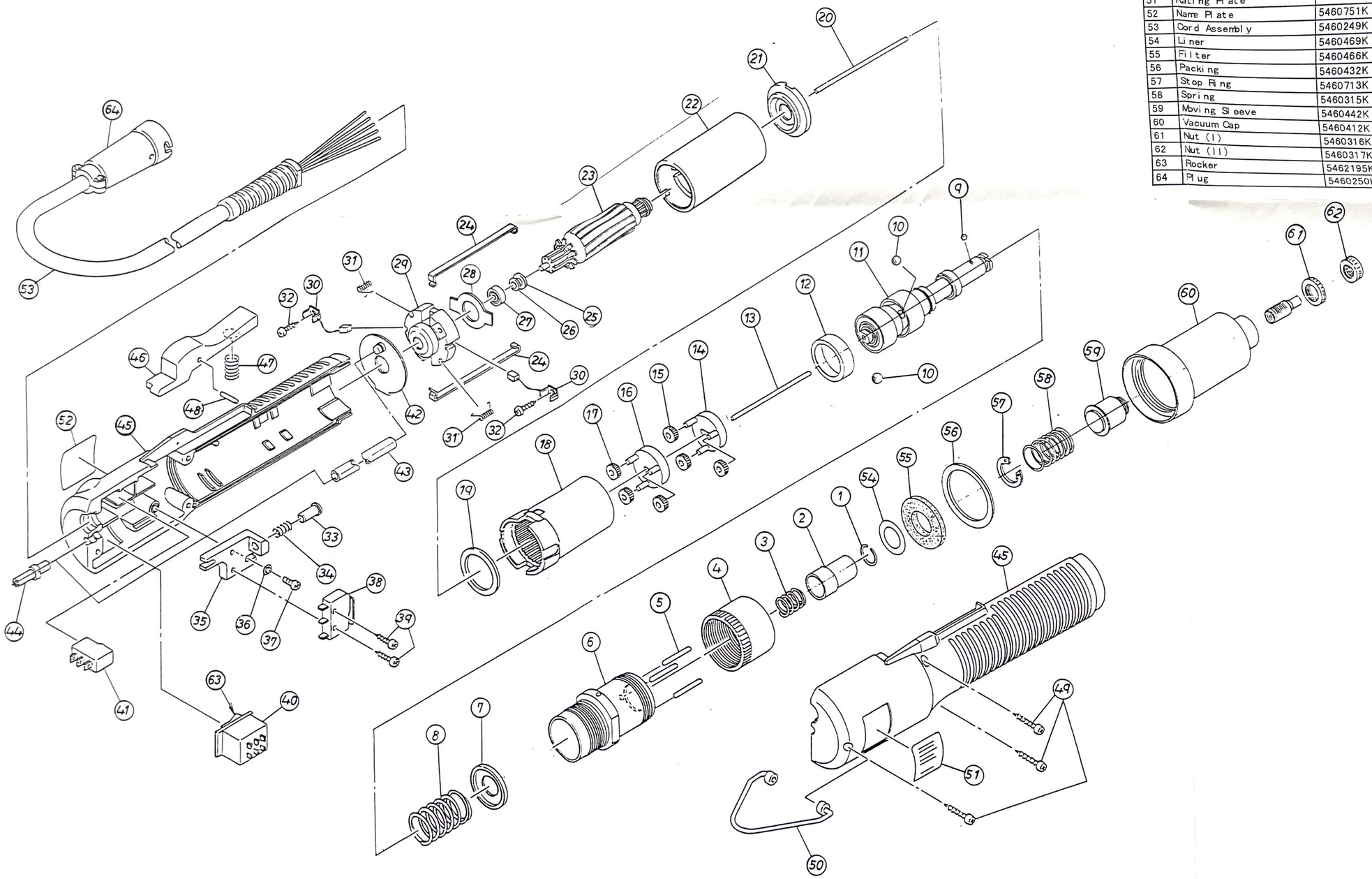

| | | | |
|---|---|---|---|
| 42 | Shielded Plate | 5460489A | 1 |
| 43 | Tube | 5460899K | 1 |
| 44 | Nozzle | 5460321K | 1 |
| 45 | Fream(A) and (B) | 5460416K | 1 |
| 46 | Trigger | 5460427K | 1 |
| 47 | Trigger Spring | 5460433K | 1 |
| 48 | Roller Pin | 5460705K | 1 |
| 49 | Tapping Screw | 5460703K | 3 |
| 50 | Lifting Hook Assembly | 5460426K | 1 |
| 51 | Rating Plate | | 1 |
| 52 | Name Plate | 5460751K | 1 |
| 53 | Cord Assembly | 5460249K | 1 |
| 54 | Liner | 5460469K | 1 |
| 55 | Filter | 5460466K | 1 |
| 56 | Packing | 5460432K | 1 |
| 57 | Stop Ring | 5460713K | 1 |
| 58 | Spring | 5460315K | 1 |
| 59 | Moving Sleeve | 5460442K | 1 |
| 60 | Vacuum Cap | 5460412K | 1 |
| 61 | Nut (I) | 5460316K | 1 |
| 62 | Nut (II) | 5460317K | 1 |
| 63 | Rocker | 5462195K | 1 |
| 64 | Plug | 5460250K | 1 |

| No. | PARTS NAME | PARTS No | Qty |
|---|---|---|---|
| 1 | StopRing | 5460134K | 1 |
| 2 | Holder Clamp | 5460422K | 1 |
| 3 | Holder Spring | 5460133K | 1 |
| 4 | Spring Ajusting Ring | 5460417K | 1 |
| 5 | Roller Pin | | |
| | for 7319, 7329 | 5462735K | 3 |
| | for 7339 | 5460706K | 3 |
| 6 | Nose Nut | 5460411K | 1 |
| 7 | Spring Plate | 5460428K | 1 |
| 8 | Clutch Spring | | |
| | for 7319 | 5460513K | 1 |
| | for 7329 | 5460431K | 1 |
| | for 7339 | 5460461K | 1 |
| 9 | Steel Ball (2mmdia) | 5462703K | 1 |
| 10 | Steel Ball | | |
| | for 7319, 7339(3.96mm) | 5462704K | 2 |
| | for 7329 (3mm) | 5462780K | 2 |
| 11 | Bit Holder Assembly | | |
| | for 7319, 7339 | 5460566K | |
| | for 7329 | 5460568K | |
| 12 | Housing | 5460558K | 1 |
| 13 | Pilot Rod (A) | 5460501K | 1 |
| 14 | Gear Beas (A) Assembly | 5460567K | 1 |
| 15 | Idle Gear (A) | | |
| | for 7319, 7329 | 5460234K | 3 |
| | for 7339 | 5460458K | 3 |
| 16 | Gear Beas (B) Assembly | | |
| | for 7319, 7329 | 5460280A | 1 |
| | for 7339 | 5460452A | 1 |
| 17 | Idle Gear (B) | | |
| | for 7319, 7329 | 5460408K | 3 |
| | for 7339 | 5460409K | 3 |
| 18 | Gear Case | | |
| | for 7319, 7329 | 5460413K | 1 |
| | for 7339 | 5460451K | 1 |
| 19 | Spacer | 5460448K | 1 |
| 20 | Pilot Rod | 5460441K | 1 |
| | Motor Assembly | | |
| 21 | Front Cover | 5460434K | 1 |
| 22 | Yoke Assembly | 5460267K | 1 |
| 23 | Rotor Assembly | | |
| | for 7319, 7329 | 5460203A | 1 |
| | for 7339 | 5460488A | 1 |
| 24 | Assembling Spring | 5460435K | 2 |
| 25 | Shim | 5460733K | 1 |
| 26 | Shim | 5460701K | 2 |
| 27 | Ball Bearing | 5460211K | 1 |
| 28 | Side Plate | 5460216K | 1 |
| 29 | End Cover | 5460214K | 1 |
| 30 | Brush Assembly | 5460217K | 2 |
| 31 | Brush Spring | 5460218K | 2 |
| 32 | Tapping Screw | 5460702K | 2 |
| 33 | Pilot | 5460246K | 1 |
| 34 | Pilot Spring | 5460247K | 1 |
| 35 | Switch Plate | 5460613K | 1 |
| 36 | Toothed Lock Washer | 5460712K | 2 |
| 37 | Screw | 5460711K | 2 |
| 38 | Micro Switch | 5462172K | 1 |
| 39 | Tapping Screw | 5460710K | 2 |
| 40 | Change-Over Switch | 5462190K | 1 |
| 41 | Micro Switch | 5462309K | 1 |

| | | | |
|---|---|---|---|
| THIRD ANGLE DRAWING | NIPPON ELECTRIC INDUSTRY CO., LTD. TOKYO JAPAN | | |
| DIMENSION IN | | | |
| SCALE | DRAWING TITLE | PARTS LIST FOR DLV7319/7329/7339-CME | |
| DATE OCT. 23, 1995 | | | |
| ORDER NO. | | | |
| APPROVED: M. Ujiie | CHECKED: | DESIGNED: T. Okamoto | DRAWN: |
| DWG. NO. | OW20558 | | |

REVISIONS: