Explosionszeichnung

imotec®

OHTAKE NJ-23 Serie

NJ-2320 NJ-2323 NJ-2326 NJ-2330

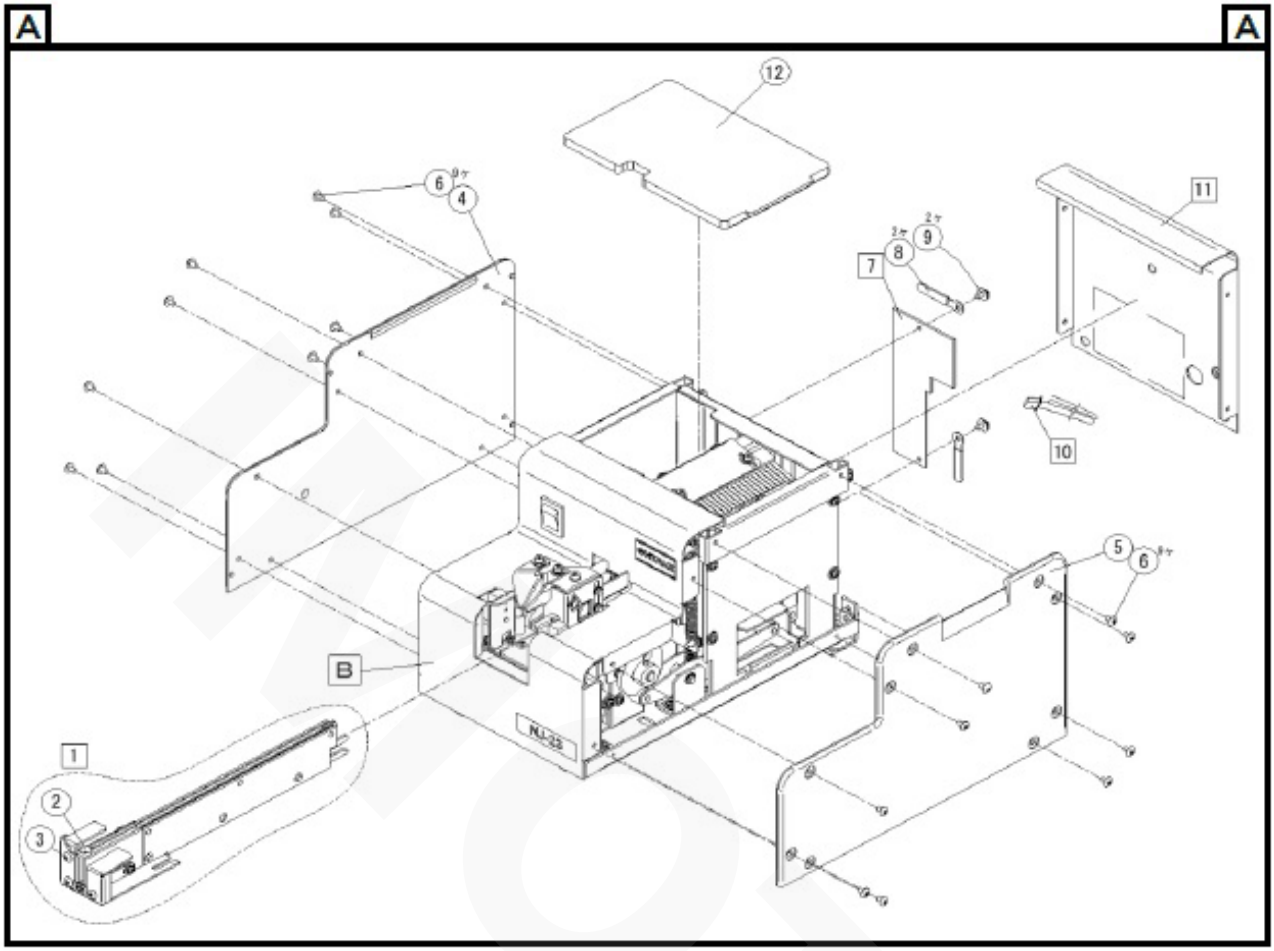

No.	Name of Part	Part Number
B	Main Body B:NJ(Model Mix ver)	-
1	Rail Assembly	-
	(Model No. M2:R20 , M2.3:R23 , M2.6:R26 , M3:R30 , M3.5:R35 , M4:R40 , M5:R50)	
	R**SET (Kit at the time of the resize)	
	(Rail, Passing Plate)	
	(Model No. M2:R20SET , M2.3:R23SET , M2.6:R26SET , M3:R30SET , M3.5:R35SET , M4:R40SET , M5:R	
2	Stopper:M2.0-3.0	NJ06075
↓	Stopper:M3.5-5.0	NJ06076
3	Plus Truss Head Screw M2.6*3 Ni (10 Pieces)	ZZM00159
4	Side Cover - Left	NJ08013
5	Side Cover - Right	NJ08014
6	Plus Truss Head Screw M2.6*4 Ni (10 Pieces)	ZZM00160
7	Main Circuit Board	NJ09507
	Circuit Board	NJ09500
8	Coaching Clip (10 Pieces)	CS-9
9	Pan Head Screw PW,SW M2.6*6 (10 Pieces)	ZZM00029
10	Signal Harness	NJ09781 #09
11	Rear Cover CP:NJ/NJR(Model Mix ver) (NJ-23)	NJ00082 #01
↓	↓ (NJ-45)	NJ00082 #02
	Rear Cover CP:NJR	NJ00048 #01,#03(#01:NJ-23,#03:NJ-45)
12	Upper Cover	NJ08015

Explosionszeichnung

imotec®

OHTAKE NJ-23 Serie

NJ-2320 NJ-2323 NJ-2326 NJ-2330

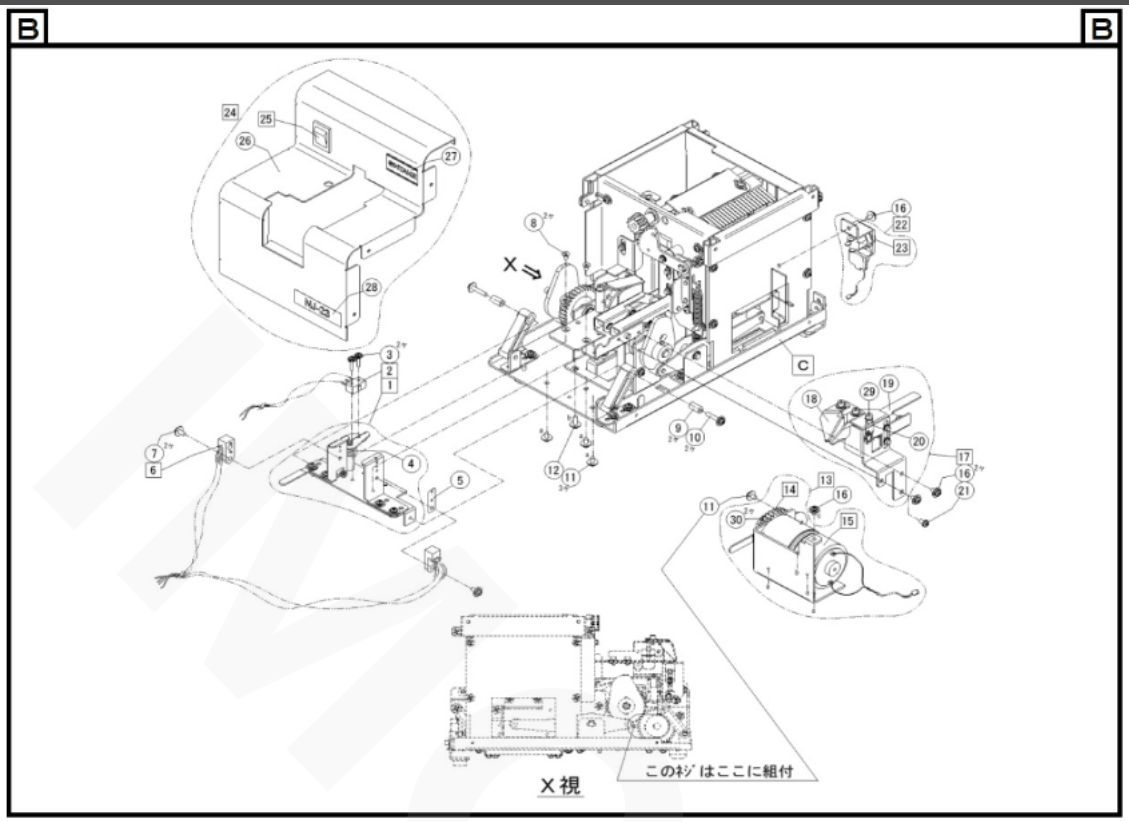

No.	Name of Part	Part Number
C	Main Body C	-
1	Rail Holder #2 Assembly (NJ-23)	NJ03008 #02
↓	↓ (NJ-45)	NJ03008 #03
2	S1 Take-Out Sensor (With Harness)	NJ09582 #01
3	Pan Head Screw PW,SW M2*10 (10 Pieces)	ZZM00021
4	Switch Link Spring	NJ03047
5	Light Receiver Slit Plate	NSR08621
6	SO Front Sensor (With Harness)	NJ09582 #02
7	Pan Head Screw PW,SW M2.6*6 (10 Pieces)	ZZM00029
8	Plus Countersunk Head Screw M2.6*4 (10 Pieces)	ZZM00099
9	Brass Spacer	ZZM00584
10	Pan Head Screw PW,SW M2.6*14 (10 Pieces)	ZZM00033
11	Pan Head Screw PW,SW M2.6*5,Looseness Prevention (10 Pieces)	ZZM00054
12	Pan Head Screw PW,SW M2.6*8,Looseness Prevention (10 Pieces)	ZZM00055
13	Driving Motor Assembly	NJ04500 #01
14	Driving Gear #1	NJ04013
15	M-MOT Main Motor (With Harness)	NJ09582 #05
16	Pan Head Screw PW,SW M2.6*5 (10 Pieces)	ZZM00028
17	Bit Guide Assembly	NJ05001 #02
18	Bit Guide	NJ05016
19	Screw Guide #1	NJ05015
20	Compression Spring	TP000809
21	Pan Head Screw SW M2.6*5 (10 Pieces)	ZZM00074
22	DC Jack Assembly	NJ00076 #01
	DC Jack Assembly	NJ02003
23	POWER Plug (With Harness)	NJ09589 #01
	POWER Plug (With Harness)	NJ09582 #04
24	Front Cover CP:NJ (NJ-23)(With Sticker)	NJ00049 #01
↓	↓ (NJ-45)(With Sticker)	NJ00049 #02
25	P-SW Power Switch (With Harness)	NJ09582 #03
26	Front Cover	NJ08011
27	Logo Sticker	ZDE00001
28	Sticker:NJ-23	ZDE00010 #03
↓	Sticker:NJ-45	ZDE00010 #04
29	Hex. Socket Head Bolt M2.6*20 (10 Pieces)	ZZM00188
30	Hex. Socket Head Screw M4*8,Looseness Prevention (10 Pieces)	ZZM00388

Explosionszeichnung

imotec®

OHTAKE NJ-23 Serie

NJ-2320 NJ-2323 NJ-2326 NJ-2330

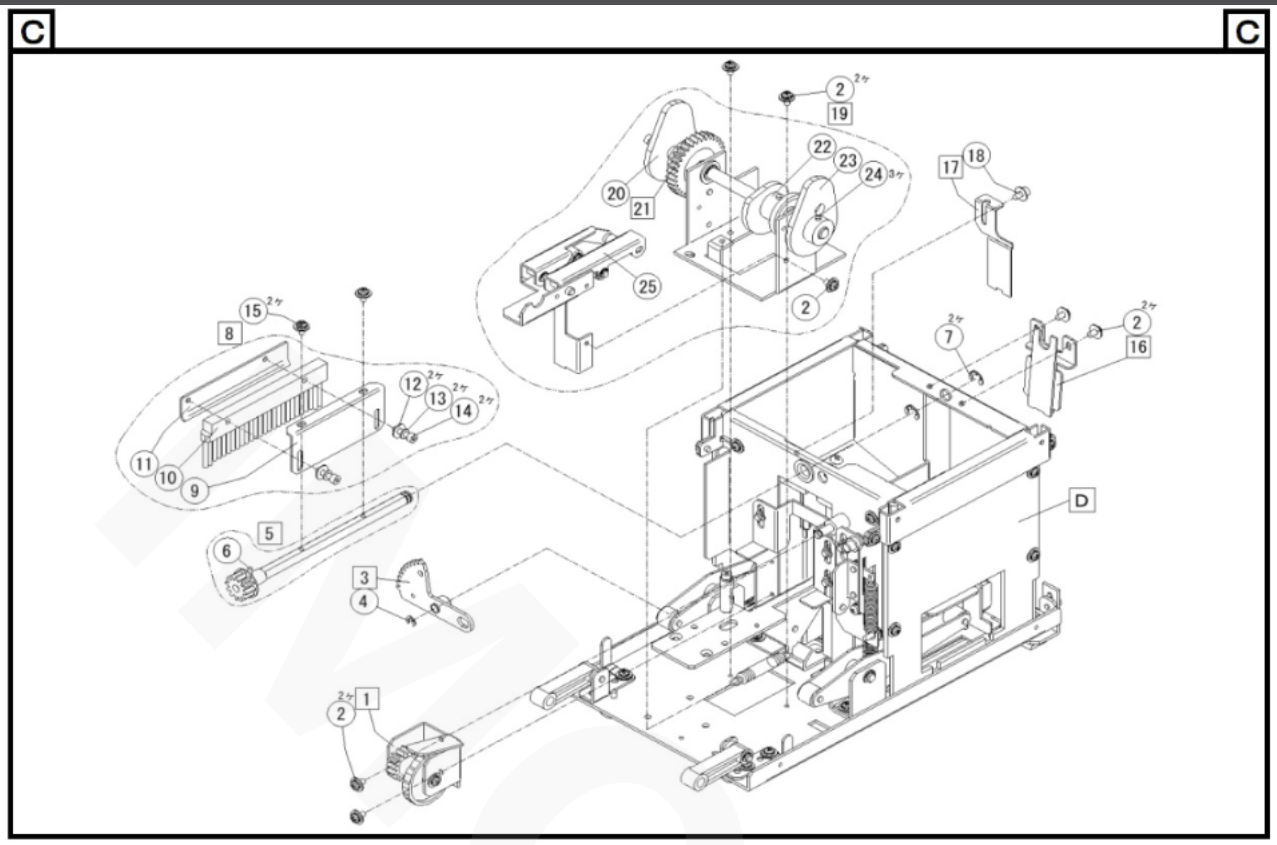

No.	Name of Part	Part Number
D	Main Body D	-
1	Vibration Cam Assembly	NJ02001 #02
2	Pan Head Screw PW,SW M2.6*5 (10 Pieces)	ZZM00028
3	Brush Driving Gear	NJ11053
	Brush Driving Gear #1	NJ02023
4	E-type Snap Ring Nominal 3 (10 Pieces)	ZZM00510
5	Brush Driving Shaft Assembly	NJ02004
6	Spring Pin 2*16 (10 Pieces)	ZZM00557
7	E-type Snap Ring Nominal 5 (10 Pieces)	ZZM00512
8	BRUSH ASSY	NJB0040
	Brsuh Assembly : M30	NJ02005 #02
9	Brush Bracket #1	NJ02038
10	Brush	NJ02039 #01
11	BRUSH BRACKET	NJ11047
	Brush Bracket #2	NJ02040
12	Plain Washer M2.6 (10 Pieces)	ZZM00393
13	Spring Washer M2.6 (10 Pieces)	ZZM00417
14	Hex. Socket Head Bolt M2.6*10 (10 Pieces)	ZZM00185
15	Pan Head Screw PW,SW M2.6*5 Ni (10 Pieces)	ZZM00067
16	Closing Plate: M3	NJ02013
↓	Closing Plate: M5	NJ02043
17	Passing Plate #1 Assembly	-
	(Model No. M2:W2320 , M2.3:W2323 , M2.6:W2326 , M3:W2330 , M3.5:W4540 , M4:W4540 , M5:W4	
18	Hex. Socket Head Bolt PW,SW M2.6*5 (10 Pieces)	ZZM00261
19	Driving Shaft Bracket Assembly	NJ04000 #02
20	Driving Cam - Left	NJ04014
21	Driving Gear #1	NJ04013
22	Shutter Cam	NJ04016
23	Driving Cam - Right	NJ04015
24	Spring Pin 2.5*16 (10 Pieces)	ZZM00559
25	Brush Link Assembly	NJ04004

Explosionszeichnung

imotec®

OHTAKE NJ-23 Serie

NJ-2320 NJ-2323 NJ-2326 NJ-2330

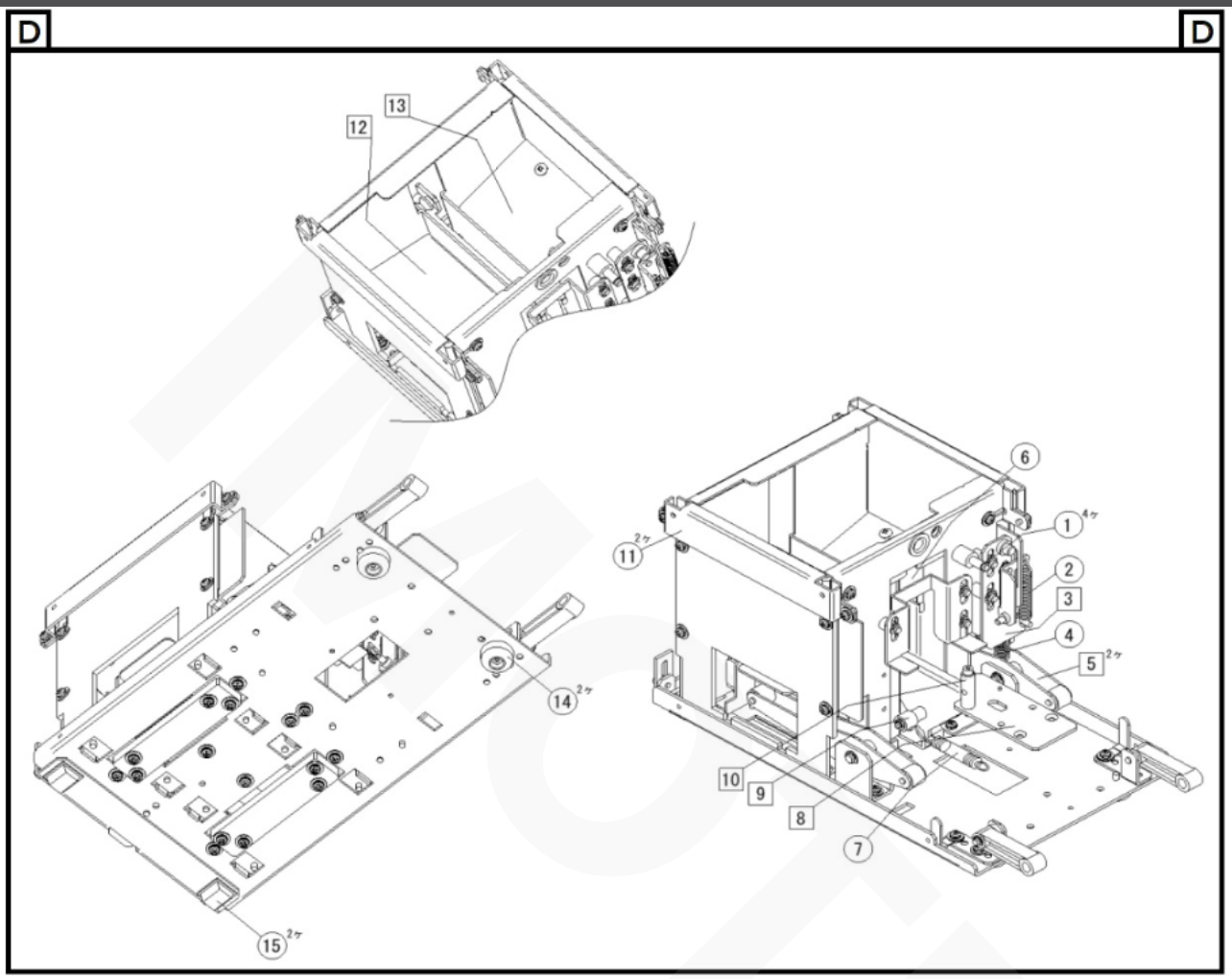

No.	Name of Part	Part Number
1	Polyurethan Slider/STW-FT45/4.6X7.2Xt0.13	ZZM00628
2	TENSION SPRING	NJ11044
3	Slide Plate #1	NJ11051
	Slide Plate #1	NJ02026
4	Extension Spring	NJ02041 #01
5	Driving Link Plate Assembly	NJ03002
6	Passing Plate #2 : M3	NJ01029
↓	Passing Plate #2 : M5	NJ01031
7	Vibration Spring	NJ03055
8	Rail Holder #1 Assembly	NJ03007
9	Vibration Roller	NJ03032
10	Setting Bolt	NJ03033
11	Cover Bracket	NJ02042
12	HOPPER LEFT	NJB0010
	Hopper - Left CP	NJ01000 #02
13	HOPPER RIGHT	NJB0020
	Hopper - Right CP	NJ01001 #02
14	Rubber Foot	TK-15
	Rubber Foot	K11W
15	Bumper	TM-166-18
	Bumper	TM-166-8