Explosionszeichnung

imotec®

OHTAKE NJR-23 Serie

NJR-2320 NJR-2323 NJR-2326 NJR-2330

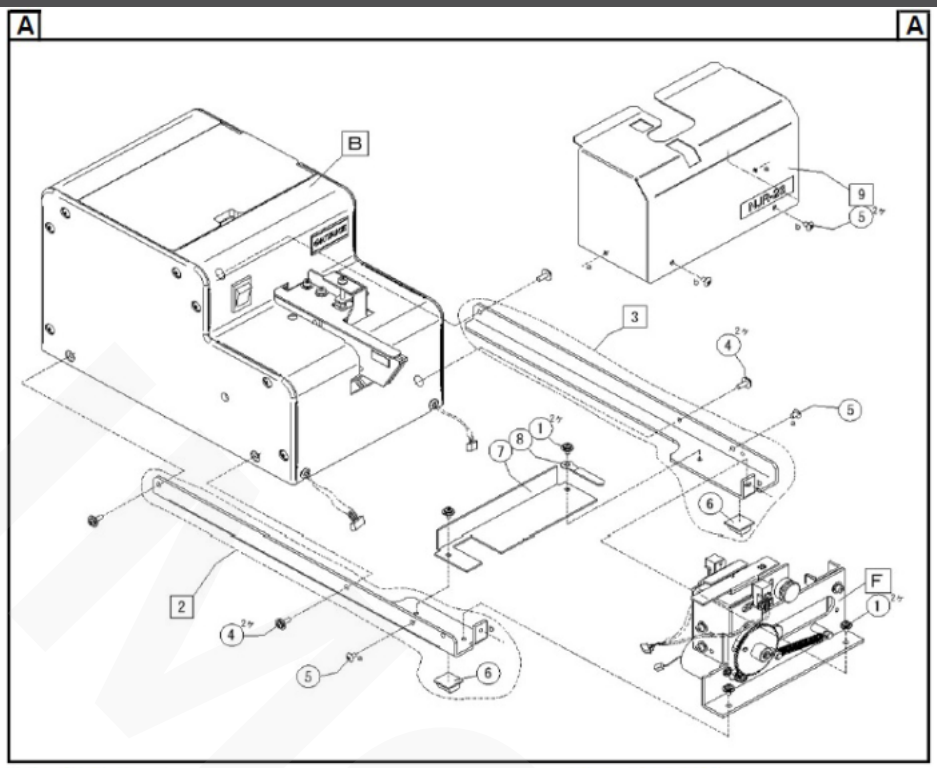

No.		Part Number	Name of Part
B		-	Main Body B:NJR(Model Mix ver)
F		NJ00079#03	Escaper Assy(C) M2.0
		NJ00079#04	Escaper Assy(C) M2.3
		NJ00079#05	Escaper Assy(C) M2.6
		NJ00079#06	Escaper Assy(C) M3.0
		NJ00079#07	Escaper Assy(C) M3.5
		NJ00079#08	Escaper Assy(C) M4.0
		NJ00079#09	Escaper Assy(C) M5.0
	※2	NJ00044#03	Escaper Assy M2.0
	※2	NJ00044#04	Escaper Assy M2.3
	※2	NJ00044#05	Escaper Assy M2.6
	※2	NJ00044#06	Escaper Assy M3.0
	※2	NJ00044#07	Escaper Assy M3.5
	※2	NJ00044#08	Escaper Assy M4.0
	※2	NJ00044#09	Escaper Assy M5.0
1		ZZM00028	Pan Head Screw PW,SW M2.6*5 (10pcs)
2		NJ11054	Escaper Base Left
	※2,※3	NJ06500	Escaper Base Left
3		NJ11055	Escaper Base Right
	※2,※3	NJ06501	Escaper Base Right
4		ZZM00030	Pan Head Screw PW,SW M2.6*8 (10pcs)
5		ZZM00160	Plus Truss Head Screw M2.6*4 Ni (10pcs)
6		TM-166-18	Bumper
	※2,※3	TM-166-8	Bumper
7		NJ06537	Reinforcing Plate(C)
8		CS-9	Coated Clip(10pcs)
9		NJR08116#01	Escaper Cover Assy(Model Mix ver) (23)(With Sticker)
		NJR08116#02	Escaper Cover Assy(Model Mix ver) (45)(With Sticker)
	※2,※3	NJR00073#01	Escaper Cover Assy (23) (With Sticker)
	※2,※3	NJR00073#02	Escaper Cover Assy (45) (With Sticker)

Explosionszeichnung

imotec®

OHTAKE NJR-23 Serie

NJR-2320 NJR-2323 NJR-2326 NJR-2330

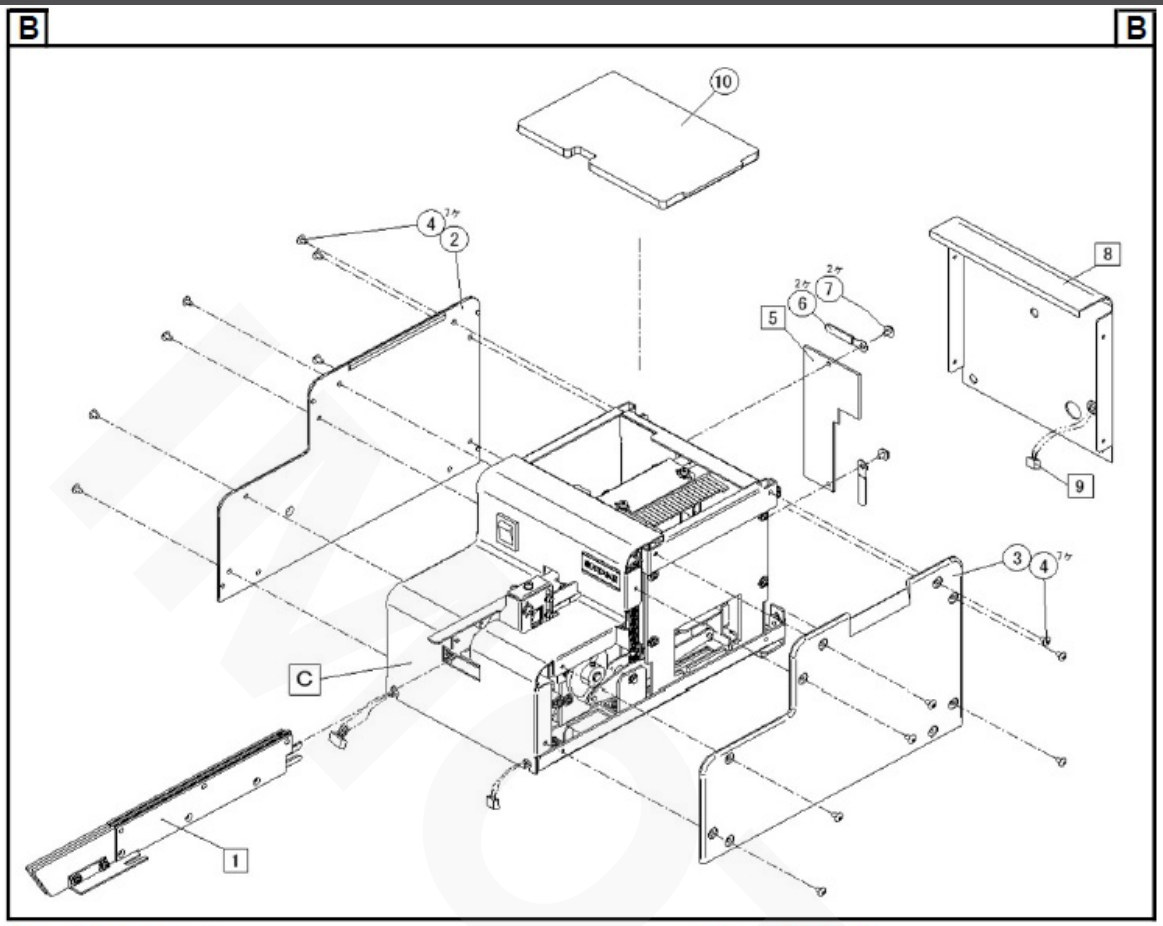

No.		Part Number	Name of Part
C		-	Main Body C
1	※3	RR20SET	Rail set M2.0
	※3	RR23SET	Rail set M2.3
	※3	RR26SET	Rail set M2.6
	※3	RR30SET	Rail set M3.0
	※3	RR35SET	Rail set M3.5
	※3	RR40SET	Rail set M4.0
	※3	RR50SET	Rail set M5.0
2		NJ08013	Left Side Cover
3		NJ08014	Right Side Cover
4		ZZM00160	Plus Truss Head Screw M2.6*4 Ni (10pcs)
5		ZPV00001#02	Main Circuit Board For NJR
6		CS-9	Coated Clip(10pcs)
7		ZZM00029	Pan Head Screw PW,SW M2.6*6 (10pcs)
8		NJ00082#02	Rear Cover Assy(Model Mix ver)
	※2	NJ00048#01	Rear Cover Assy (23)
	※2	NJ00048#03	Rear Cover Assy (45)
9		NJ09781#09	Signal Harness
	※2,※4	NJR09581#07	Signal Harness
10		NJ08015	Upper Cover

Explosionszeichnung

imotec®

OHTAKE NJR-23 Serie

NJR-2320 NJR-2323 NJR-2326 NJR-2330

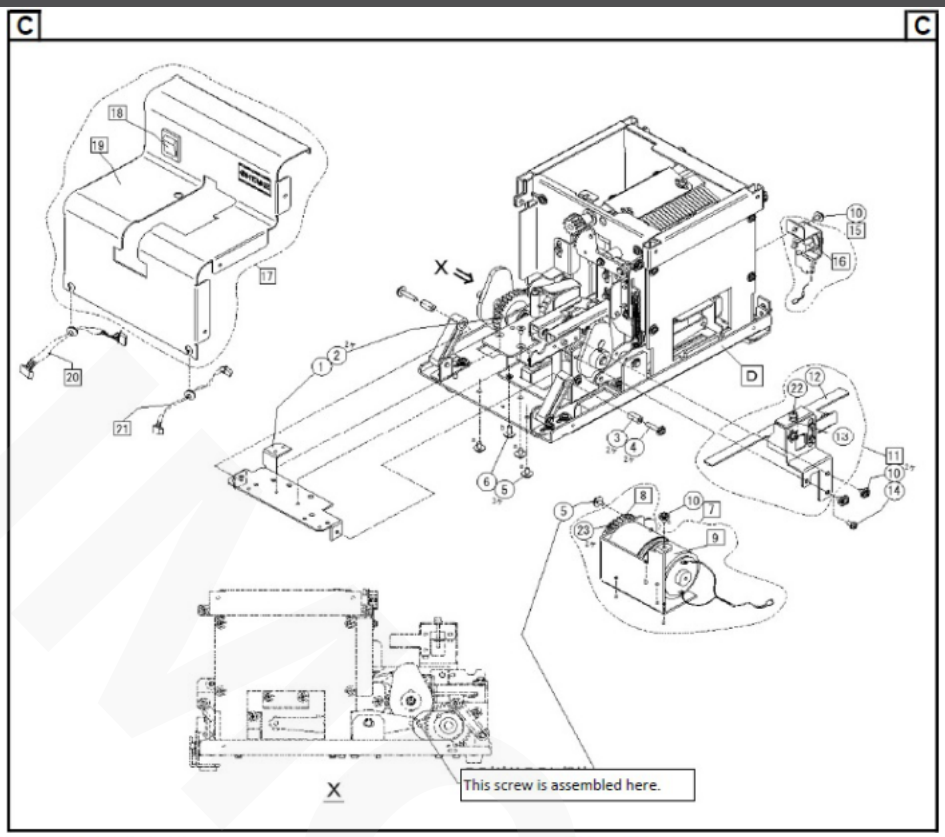

No.		Part Number	Name of Part
D		-	Main Body D
1		NJ03034	Rail Holder #2
2		ZZM00099	Plus Countersunk Head Screw M2.6*4 (10pcs)
3		ZZM00584	Brass Spacer
4		ZZM00033	Pan Head Screw PW,SW M2.6*14 (10pcs)
5		ZZM00054	Pan Head Screw PW,SW M2.6*5 Loosening Prevention (10pcs)
6		ZZM00055	Pan Head Screw PW,SW M2.6*8 Loosening Prevention (10pcs)
7		NJ04501	Driving Motor Assy
8		NJ04013	Driving Gear #1
9		NJR09582#08	Main Motor (With Harness)
10		ZZM00028	Pan Head Screw PW,SW M2.6*5 (10pcs)
11		NJ05001#03	Bit Guide Assy
12		NJ05022	Screw Guide #1
13		TPO00809	Compression Spring
14		ZZM00074	Pan Head Screw SW M2.6*5 (10pcs)
15		NJ00076#02	DC Jack Assy:NJR
	※2,※3	NJ02003	DC Jack Assy
16		NJ09589#02	POWER Plug (With Harness)
	※2,※3	NJR09582#04	POWER Plug (With Harness)
17		NJ02008	Front Cover Assy (With Sticker)
18		NJR09582#03	Power Switch (With Harness)
19		NJR08113	Front Cover Assy (With Sticker)
20		NJR09581#02	Front Sensor Junction Cable
21		NJR09581#05	Escaper Motor Junction Cable
22		ZZM00188	Hex. Socket Head Bolt M2.6*20 (10pcs)
23		ZZM00388	Hex. Socket Head Screw M4*8 Loosening Prevention (10pcs)

Explosionszeichnung

imotec®

OHTAKE NJR-23 Serie

NJR-2320 NJR-2323 NJR-2326 NJR-2330

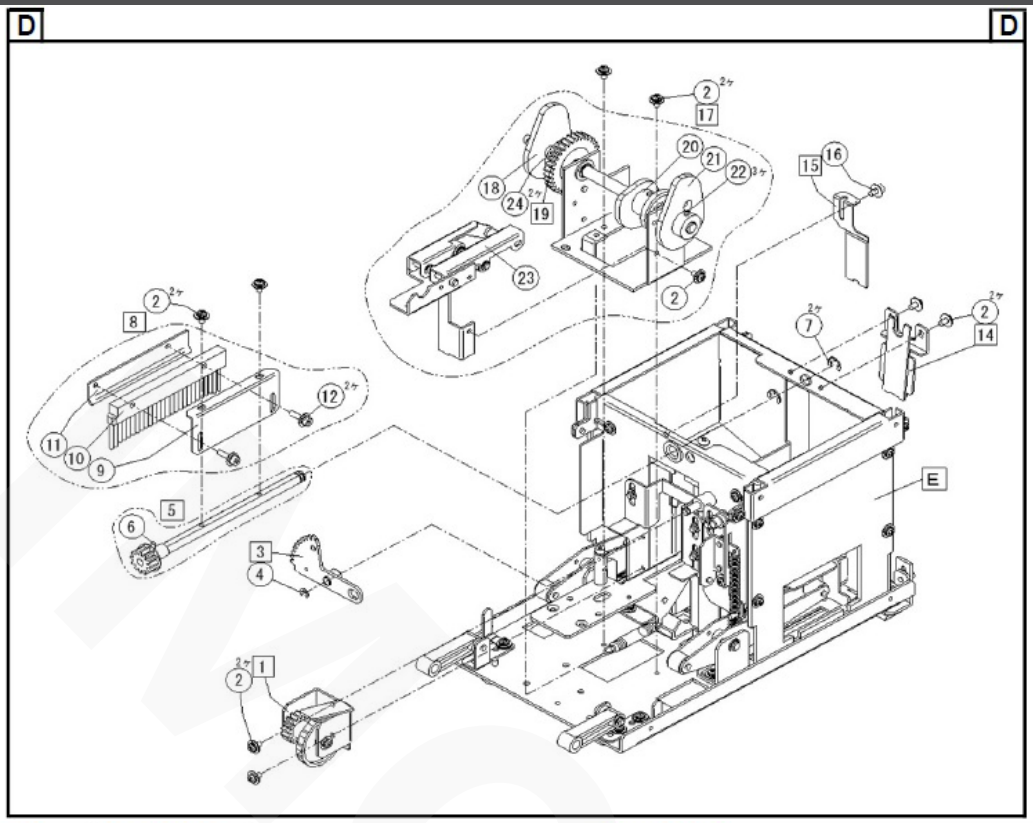

No.		Part Number	Name of Part
E		-	Main Body E
1		NJ02001#02	Vibration Cam Assy
2		ZZM00028	Pan Head Screw PW,SW M2.6*5 (10pcs)
3		NJ11053	Brush Driving Gear
	※2,※3	NJ02023	Brush Driving Gear 1
4		ZZM00510	E-Type Snap Ring E-3 (10pcs)
5		NJ02004	Brush Driving Shaft Assy
6		ZZM00557	Spring Pin 2*16 (10pcs)
7		ZZM00512	E-Type Snap Ring E-5 (10pcs)
8		NJB0040	BRUSH Assy
9		NJ02038	Brush Bracket #1
10		NJ02039#01	Brush
11		NJ11047	BRUSH BRACKET
12		ZZM01008	Hex. Socket Head Bolt PW,SW M2.6*10 (10pcs)
14		NJ02013	Closing Plate: M3
		NJ02043	Closing Plate: M5
15		NJ01008#03	Passing Plate #1 Assy M2.0:W2320
		NJ01008#04	Passing Plate #1 Assy M2.3:W2323
		NJ01008#05	Passing Plate #1 Assy M2.6:W2326
		NJ01008#06	Passing Plate #1 Assy M3.0:W2330
		NJ01008#07	Passing Plate #1 Assy M3.5:W4540
		NJ01008#08	Passing Plate #1 Assy M4.0:W4540
		NJ01008#09	Passing Plate #1 Assy M5.0:W4550
16		ZZM00261	Hex. Socket Head Bolt PW,SW M2.6*5 (10pcs)
17		NJ04000#02	Driving Shaft Bracket Assy
18		NJ04014	Driving Cam - Left
19		NJ04013	Driving Gear #1
20		NJ04016	Shutter Cam
21		NJ04015	Driving Cam - Right
22		ZZM00559	Spring Pin 2.5*16 (10pcs)
23		NJ04004	Brush Link Assy
24		ZZM00388	Hex. Socket Head Screw M4*8 Loosening Prevention (10pcs)

Explosionszeichnung

imotec®

OHTAKE NJR-23 Serie

NJR-2320 NJR-2323 NJR-2326 NJR-2330

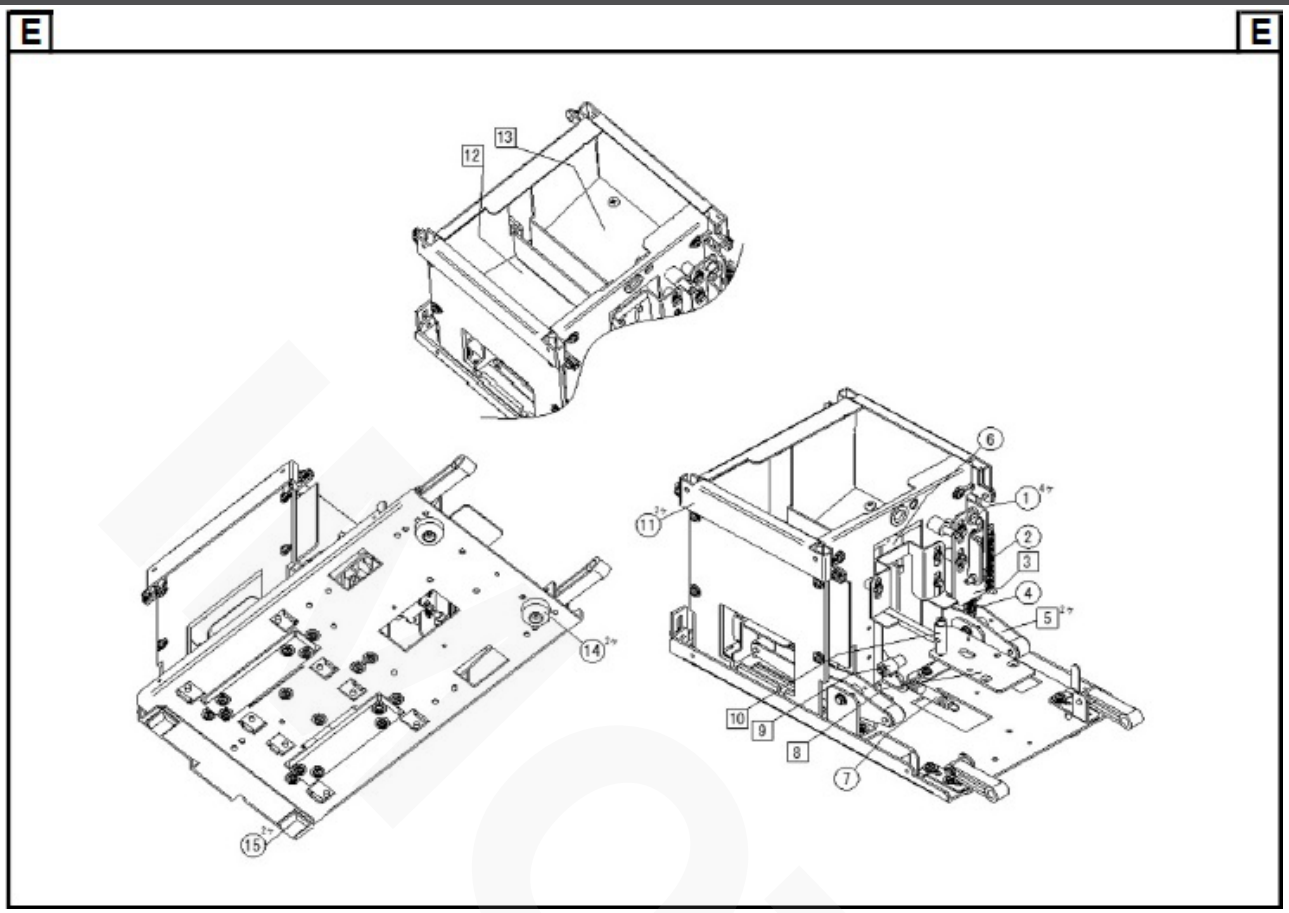

No.		Part Number	Name of Part
1		ZZM00628	Polyurethan Slider/STW-FT45/4.6X7.2Xt0.13 (10pcs)
2		NJ11044	TENSION SPRING
3		NJ11051	Slide Plate #1
	※2,※3	NJ02026	Slide Plate #1
4		NJ02041#01	Extension Spring
5		NJ03002	Driving Link Plate Assy
6		NJ01029	Passing Plate #2:M3
		NJ01031	Passing Plate #2:M5
7		NJ03055	Vibration Spring
8		NJ03007	Rail Holder #1 Assy
9		NJ03032	Vibration Roller
10		NJ03033	Fixing Bolt
11		NJ02042	Cover Bracket
12		NJB0010	HOPPER LEFT
	※2,※3	NJ01000#02	Hopper Left Assy
13		NJB0020	HOPPER RIGHT
	※2,※3	NJ01001#02	Hopper Right Assy
14		TM-TK-15	Rubber Foot
	※2,※3	TM-K11W	Rubber Foot
15		TM-166-18	Bumper
	※2,※3	TM-166-8	Bumper

Explosionszeichnung

imotec®

OHTAKE NJR-23 Serie

NJR-2320 NJR-2323 NJR-2326 NJR-2330

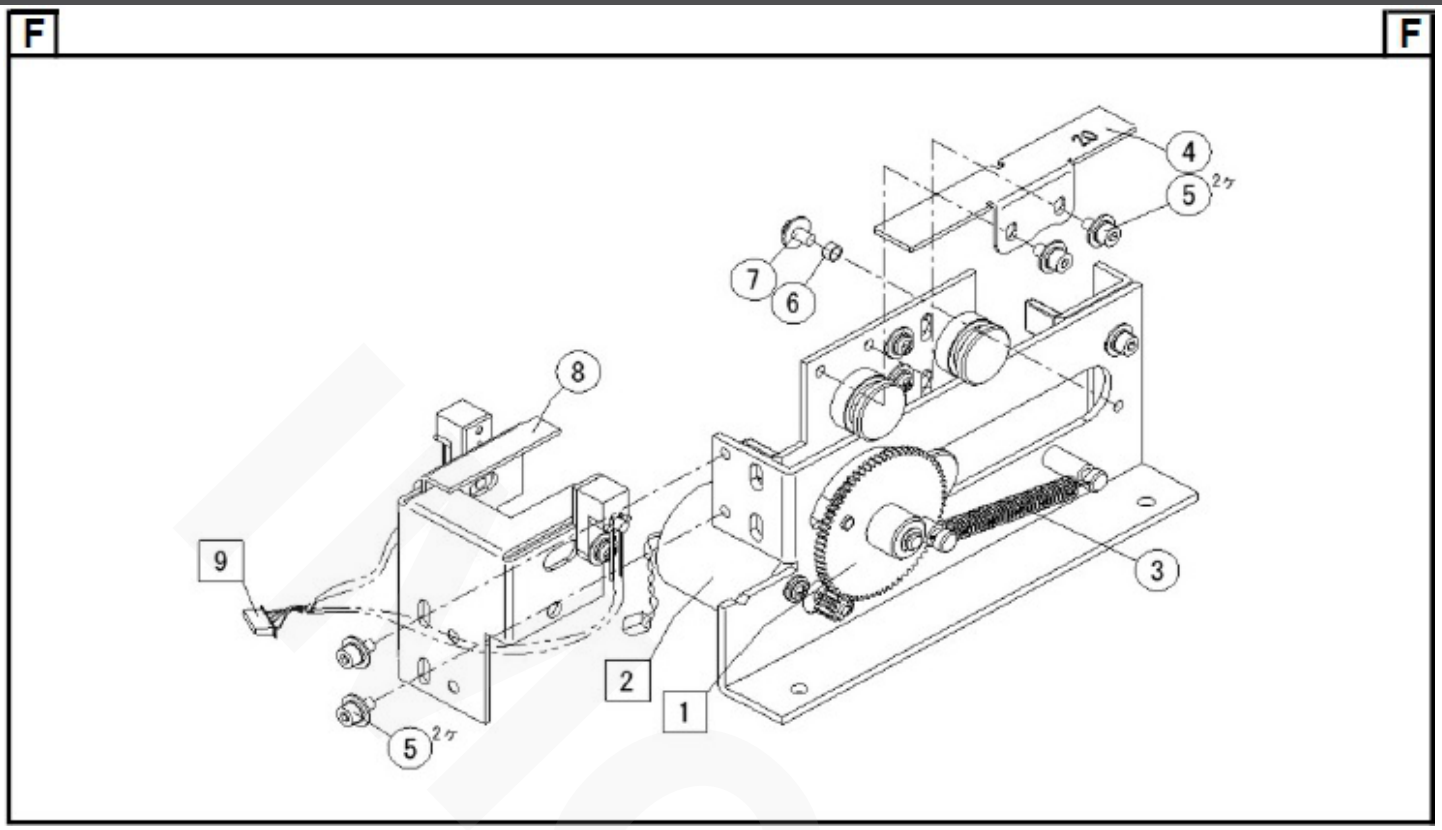

No.		Part Number	Name of Part
1		NJ06515	Driving Gear (Escaper)
2		NJ06643	NJR Escaper Motor (With Harness)(C)
	※2,※3	NJR09582#06	Escaper Motor (With Harness)
3		NJ06535	Extension Spring
4		NJ06528#03	Escaper:20 M2.0:E20
		NJ06528#04	Escaper:23 M2.3:E23
		NJ06528#05	Escaper:26 M2.6:E26
		NJ06528#06	Escaper:30 M3.0:E30
		NJ06528#07	Escaper:35 M3.5:E35
		NJ06528#08	Escaper:40 M4.0:E40
		NJ06528#09	Escaper:50 M5.0:E50
5		ZZM00261	Hex. Socket Head Bolt PW,SW M2.6*5 (10pcs)
6		ZZM01080	Coil Bushing 2.6*2
7		ZZM00028	Pan Head Screw PW,SW M2.6*5 (10pcs)
8		NJ06530	Bolt Plate
9		NJR09582#01	Front Sensor (With Harness)