Explosionszeichnung

imotec®

OHTAKE NSB Serie

NSB-10 NSB-12 NSB-14 NSB-17
NSB-20 NSB-23 NSB-26 NSB-30

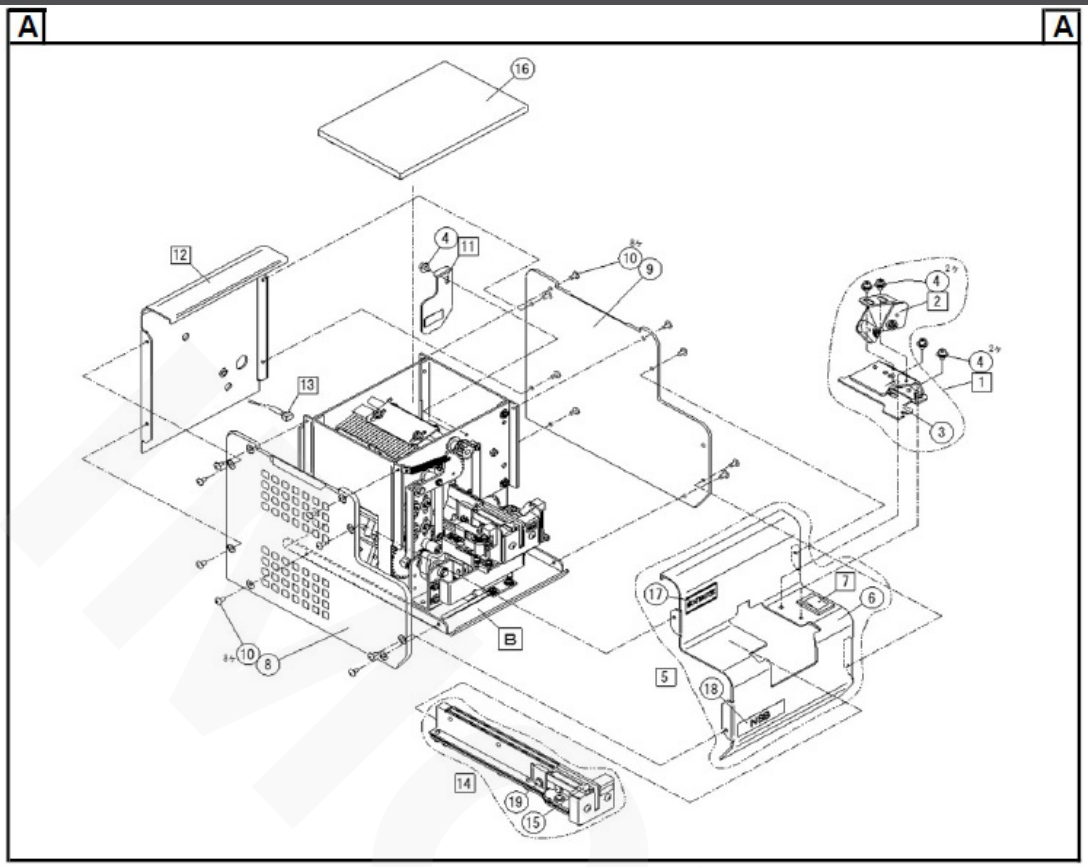

No.		Part Number	Name of Part
B		-	Main Unit:NSB(Model Mix ver)
1		NSB06003	Bit Guide Unit:NSB
2		NSB06002	Bit Guide Assy
3		NSB06102	Presser Plate (Bit Guide)
4		ZZM00261	Hex. Socket Head Bolt PW,SW M2.6*5 (10pcs)
5		NSB07015	Front Cover Assy (With Sticker)
6		NSB07108	Front Cover
7		NSB09182#03	Power Switch (With Harness)
8		NSB07109	Left Side Cover
9		NSB07110	Right Side Cover
10		ZZM00160	Plus Truss Head Screw M2.6*4 Ni (10pcs)
11		NSB02052#01	Passing Plate:SW1017(M1.0-M1.7)
		NSB02052#02	Passing Plate:SW2030(M2.0-M3.0)
12		NSB07017	Rear Cover Assy(Model Mix ver)
	※2	NSB07011#01	Rear Cover Assy
13		NSR09681#08	Signal Harness
14	※3	SR10SET	Rail set M1.0
	※3	SR12SET	Rail set M1.2
	※3	SR14SET	Rail set M1.4
	※3	SR17SET	Rail set M1.7
	※3	SR20SET	Rail set M2.0
	※3	SR23SET	Rail set M2.3
	※3	SR26SET	Rail set M2.6
	※3	SR30SET	Rail set M3.0
15		NSB05113	Stopper:M10 (M1.0)
		NSB05114	Stopper:M14 (M1.2,M1.4)
		NSB05115	Stopper:M30 (M1.7-M3.0)
16		NSB07111	Upper Cover
17		ZDE00001	Logo Sticker
18		ZDE00010#07	Sticker:NSB
19		ZZM00027	Pan Head Screw PW,SW M2.6*4 (10pcs)

Explosionszeichnung

imotec®

OHTAKE NSB Serie

NSB-10 NSB-12 NSB-14 NSB-17
NSB-20 NSB-23 NSB-26 NSB-30

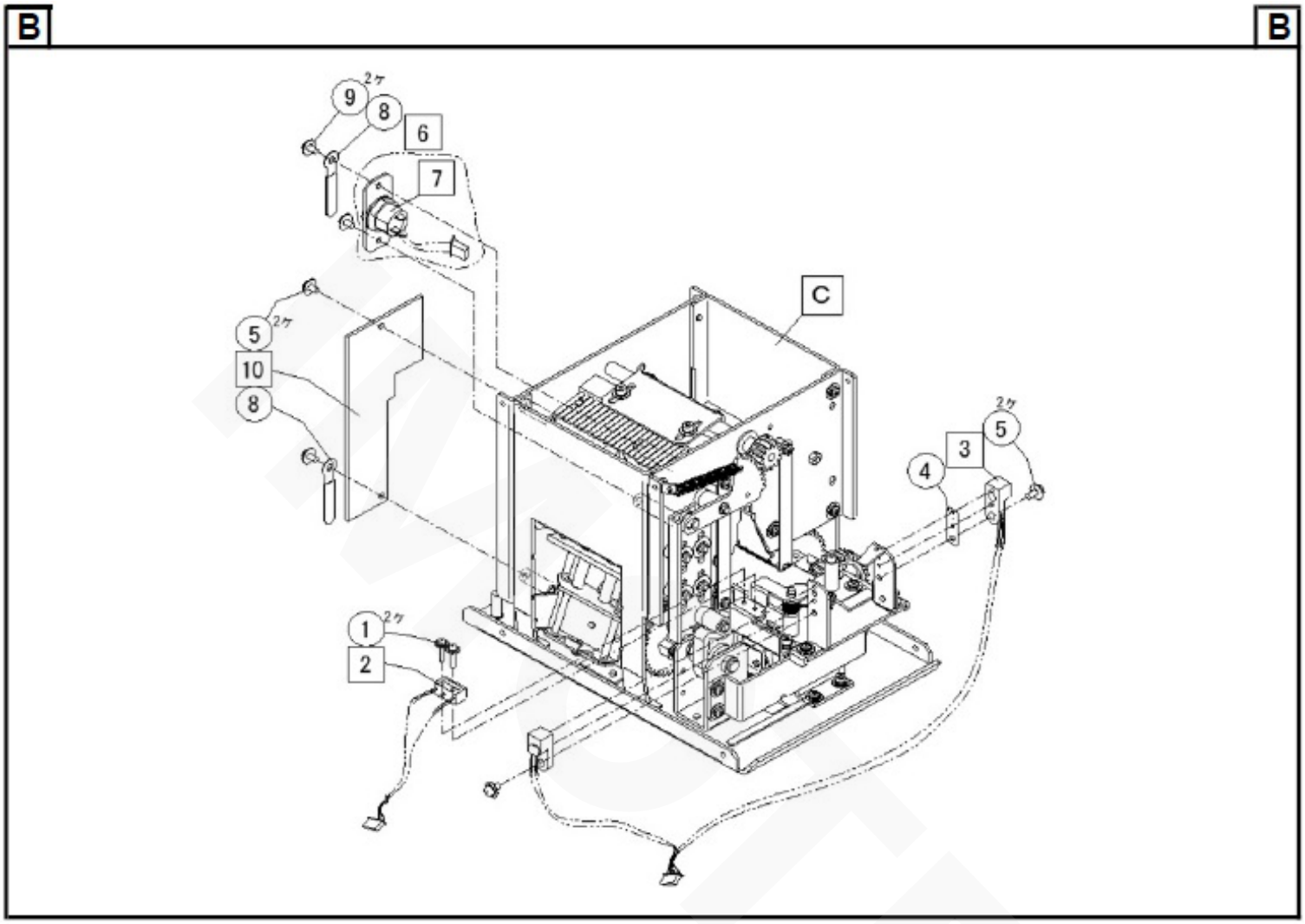

No.		Part Number	Name of Part
C		-	Block "C" Assy
1		ZZM00021	Pan Head Screw PW,SW M2*10 (10pcs)
2		NSB09182#01	Take-Out Sensor (With Harness)
3		NSB09182#02	Front Sensor (With Harness)
4		NSR08621	Light Receiver Slit Plate
5		ZZM00029	Pan Head Screw PW,SW M2.6*6 (10pcs)
6		NSB02061#01	DC Jack Bracket Assy
	※2,※3	NSB02059#01	DC Jack Bracket Assy
7		NSB09183#01	POWER Plug (With Harness)
	※2,※3	NSB09182#04	POWER Plug (With Harness)
8		CS-9	Coated Clip(10pcs)
9		ZZM00028	Pan Head Screw PW,SW M2.6*5 (10pcs)
10		ZPV00001#01	Main Circuit Board For NJ-NSB

Explosionszeichnung

imotec®

OHTAKE NSB Serie

NSB-10 NSB-12 NSB-14 NSB-17
NSB-20 NSB-23 NSB-26 NSB-30

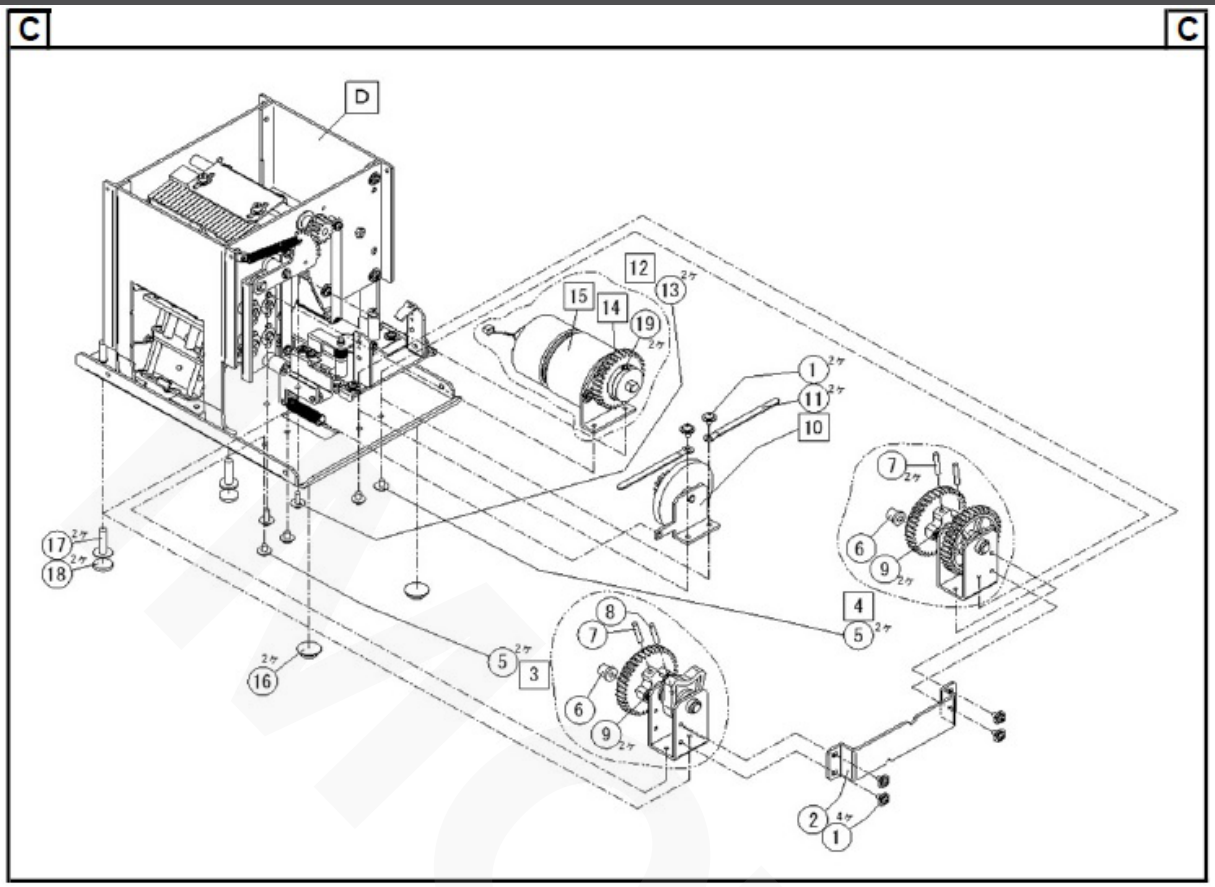

No.		Part Number	Name of Part
D		-	Hopper Unit:NSB
1		ZZM00028	Pan Head Screw PW,SW M2.6*5 (10pcs)
2		NSIB3101	Driving Shaft Bracket Supporter
3		NSB03053	Driving Shaft Bracket Assy Left
4		NSB03054	Driving Shaft Bracket Assy Right
5		ZZM00054	Pan Head Screw PW,SW M2.6*5 Loosening Prevention (10pcs)
6		NSB03107	Driving Roller
7		ZZM00560	Spring Pin 2.5*20 (10pcs)
8		ZZM00558	Spring Pin 2.5*14 (10pcs)
9		ZZM00034	Pan Head Screw PW,SW M2.6*16 (10pcs)
10		NSB03055	Vibration Cam Assy
11		CS-1	Coated Clip(10pcs)
12		NSB03056	Main Motor Unit:NSB
13		ZZM00030	Pan Head Screw PW,SW M2.6*8 (10pcs)
14		NJ04013	Driving Gear #1
15		NSB09182#05	Main Motor (With Harness)
16		TM-166-12	Bumper
17		ZZM01081	Weld Bolt BT4*15 (4pcs)
18		TM-182-816-10	Urethane Roll Stock
19		ZZM00388	Hex. Socket Head Screw M4*8 Loosening Prevention (10pcs)

Explosionszeichnung

imotec®

OHTAKE NSB Serie

NSB-10 NSB-12 NSB-14 NSB-17
NSB-20 NSB-23 NSB-26 NSB-30

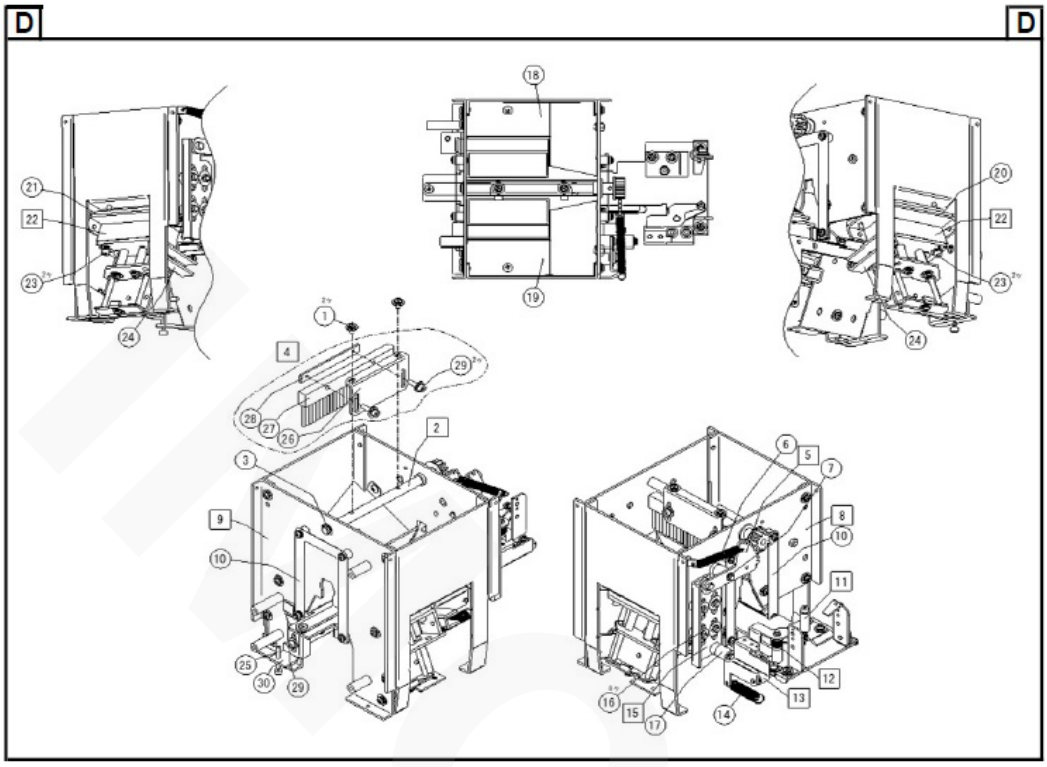

No.		Part Number	Name of Part
1		ZZM00028	Pan Head Screw PW,SW M2.6*5 (10pcs)
2		NSB02055	Brush Shaft Assy
3		ZZM00512	E-Type Snap Ring E-5 (10pcs)
4		NSB02053#01	Brush Assy (Standard)
		NSB02053#02	Brush Assy (Hard)(Option)
5		NSB02058	Brush Driving Gear Large 3
	※2,※3	NSB02051#04	Brush Driving Gear Large
6		NSB02127	Extension Spring
7		ZZM00510	E-Type Snap Ring E-3 (10pcs)
8		NSB02051#02	Front Hopper Wall
9		NSB02060	Rear Hopper Wall
	※2,※3	NSB02051#01	Rear Hopper Wall
10		NSB02116#01	Vibration Plate
11		NSB04053	Rail Holder Fixing Bolt
12		NSB04119	Switch Link Spring
13		NJ03032	Vibration Roller
14		NSB04120	Vibration Spring
15		NSB02054	Brush Driving Plate Assy
	※2,※3	NSB02064	Brush Driving Plate Assy
16		NSB02128	Polyslider (10pcs)
17		NSB02108	Brush Driving Plate Roller
18		NSB02122	Inclined Plate Right
19		NSB02123	Inclined Plate Left
20		NSB01123	Inclined Plate Holder Right
21		NSB01122	Inclined Plate Holder Left
22		NSB01054	Hopper Block Assy
23		ZZM01009	Hex. Socket Head Bolt PW,SW M2.6*12 (10pcs)
24		NSB01108	Driving Holder Slit Plate
25		NSB02125	Adjusting Screw
26		NSB02111	Brush Bracket #1
27		NSB02110#01	Brush (Standard)
		NSB02110#02	Brush (Hard)(Option)
28		NSB02112	Brush Bracket #2
29		ZZM01008	Hex. Socket Head Bolt PW,SW M2.6*10 (10pcs)
30		NSB02114	Vibration Adjusting Plate